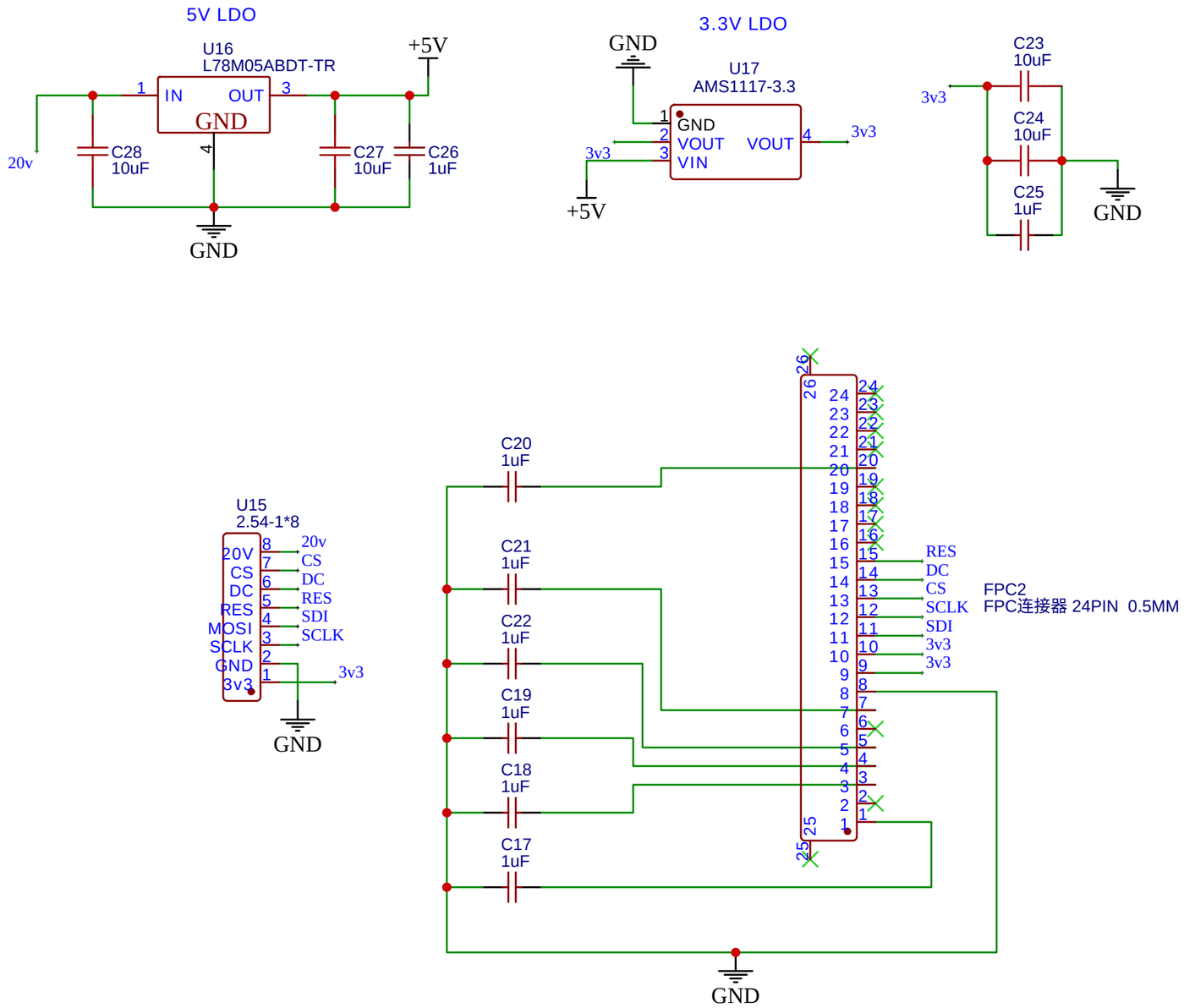


| | |
|---|---|
| TITLE: Memory LCD DRV | REV: 1.0 |
| EasyEDA Company: imuslab | Sheet: 1/1 |
| Date: 2025-08-30 Drawn By: tobychui | |